User manual—Test plug for ABS socket 004.508-031

Test

User manual—Test plug for ABS socket

Do the light diodes 1-3-4 light up ?

Yes →

Turn on the ignation. Do the light diode 2 light up ?

Yes →

Push down the switch to position 1. The control lamp must light up by error on the trailer.

No ↓ **Check the main fuse (30). If it is OK, check the ground on the pins 3 and 4.**

No ↓ **Check the ignation fuse (15)**
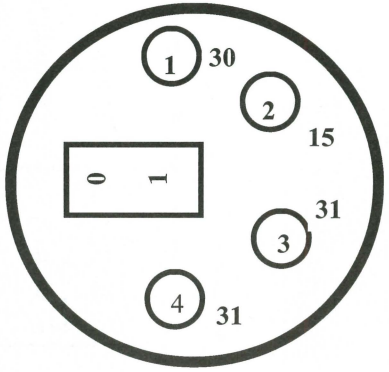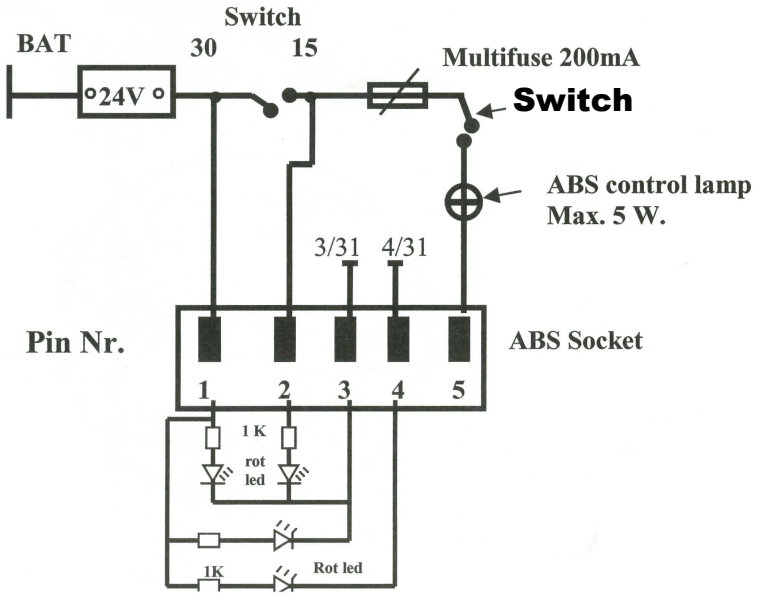
No ↓ **Check the control lamp.**